X9X-35

Original

361610.1

EN - Assembly Instruction and User Manual (Page 2)

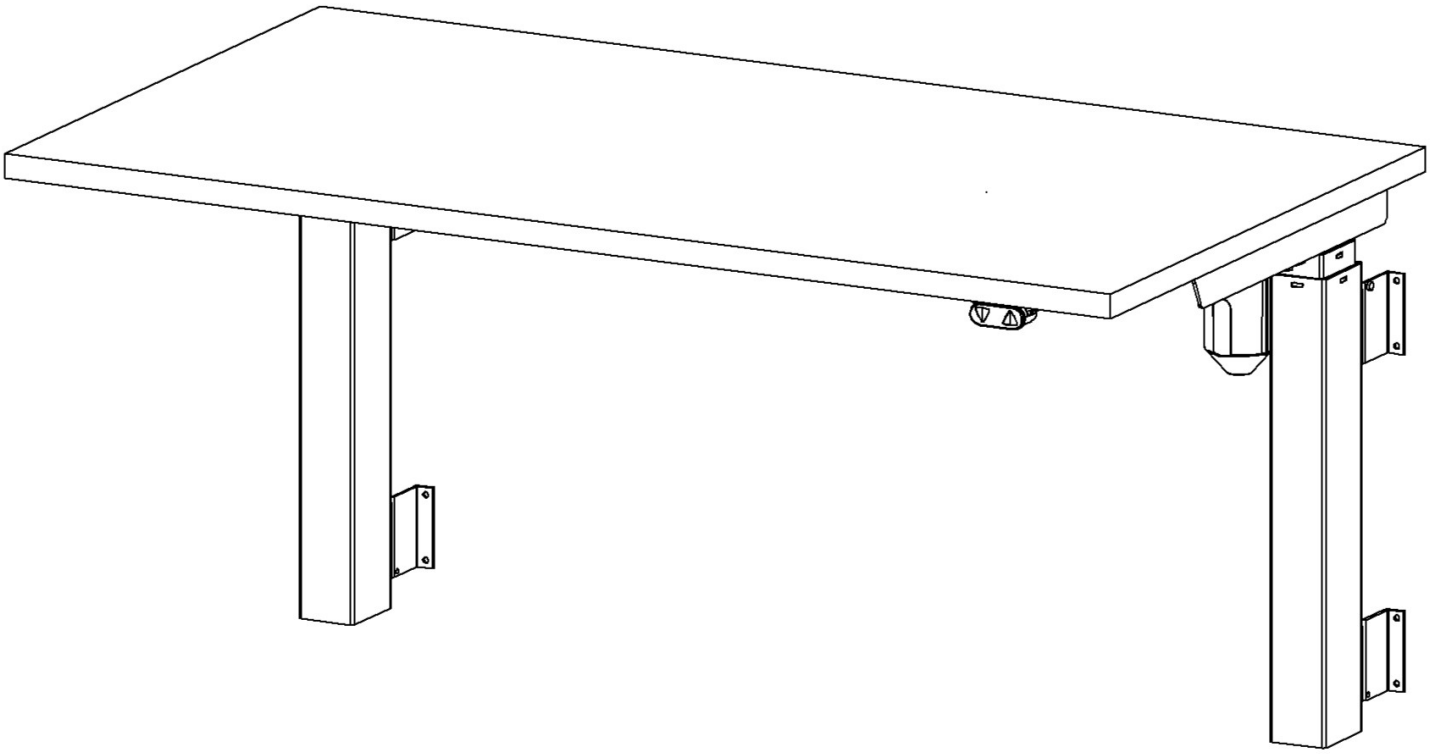

EN

TABLE OF CONTENTS

1. Safety and warnings
2. Usage
3. Set up and installation
4. Operation
5. Maintenance and defects
6. Technical data
7. Parts
8. Assembly instructions
9. Declaration of conformity

IMPORTANT NOTES!

Prior to installment, use and maintenance of the table frame, any installer and any user of the table must study this assembly and operation manual carefully, so as to gain a complete understanding of its contents

1. Safety and warnings

This table complies with the prescribed safety regulations. Inappropriate use may cause damage to persons and table.
Please read the operation manual prior to start using the table. It provides you with important information about safety, use, installation and maintenance of the table, and thus protecting you and your children and avoiding damage on the table.
Please guard this operation manual and pass it on to any future owner!

2. Usage

The electromotive, height-adjustable tables are designed for workstations in dry work environments only (0-40°C; 20-90% relative humidity).
The table height is infinitely adjustable, so that it can be set to the most ergonomically suitable working level: They have not been designed for other purposes than those included in this manual, e.g. they are not to be used in areas of high humidity or dampness, nor for lifting people. Any other use is at one's own risk!
Do not crawl, lie or move around under the table frame, and do not sit or stand on the table frame.
CHILDREN should only use the table when supervised by adults.
Liability - The manufacturer accepts under no circumstances warranty claims or liability claims for damages arising from improper use or handling of the table frame other than that described in this operation manual.

3. Set up and installation

When the table has been assembled (see assembly instructions in CHAPTER 8) the adjustable feet are installed so that the table is level and does not shift. Then the table is connected to the 100-240 VAC outlet and the table is ready for use.
Make sure that no cables can get jammed. Place the table in a safe distance from window frames, radiators, furniture etc. so that people do not get stuck.
Do not place any objects above 21" (55 cm) underneath the table. When moving the table after it has been assembled, the tabletop needs to be removed. The table CANNOT be lifted by the tabletop.
The desk needs to be lowered to minimum height before moving.

4. Operation

UP/DOWN operation:
Push the buttons for operation up
or down

WARNING: FAILURE TO COMPLY WITH OR OBSERVE ALL ASSEMBLY, SAFETY AND OPERATION INSTRUCTIONS AND WARNINGS REGARDING THE USE OF THIS PRODUCT MAY RESULT IN SERIOUS BODILY INJURY.

5. Maintenance and defects

The table does not require any maintenance by usage as described in chapter 2 in the directions for use. The table is only to be maintained with a damp cloth.
In the event of the occurrence of jarring sounds during operation, STOP using the table and please contact the dealer.

6. Technical data

Frame, materials	Steel, powder lacquered
Weight	20 kg
Width	72 - 172 cm
Depth	43 cm
Height	58-118 cm
Max. load	40 kg
Speed	31 mm/s
Duty cycle	10% by 50% of max. load on frame or max. 2 min. continuously
Operation	Micro switches
Voltage	100-240 VAC | 50/60 Hz
Standby Consumption	< 0,15 Watt

7. Parts

See page 4 - 5.

8. Assembly instructions

See page 6 - 10.

9. Declaration of conformity

We hereby declare, under our sole responsibility that the following products: Sit and stand table product type X9X-35 is in accordance with: Directive 2006/42/EF of The European Parliament and of the Council of 17 May 2006 on machinery
With reference to the above please be aware that:the sit and stand table is considered a machine and the sit and stand table may not be used until it has been assembled and installed according to the instructions.

Manufacturer
ConSet A/S | Industrivej 23 | 6900 Skjern | Denmark www.conset.com | Tlf.: +45 96800080 |conset@conset.com

7. Parts

A 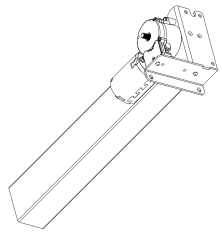 x1	B 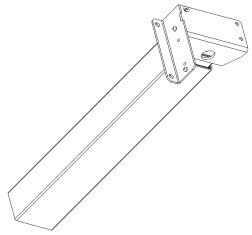 x1	C 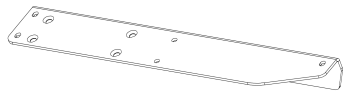 x1
D 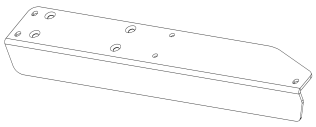 x1	E 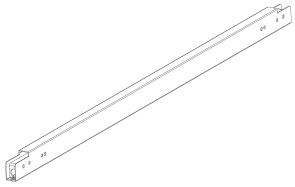 x1	F 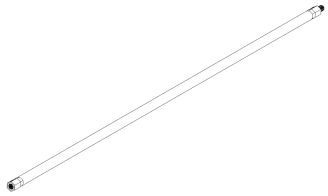 x1
G 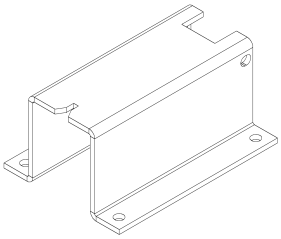 x4	H 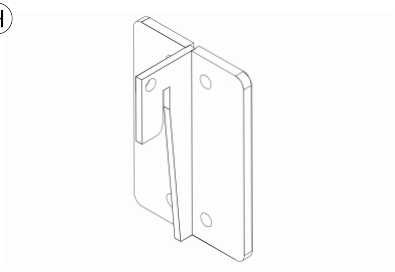 x4	I 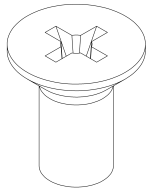 x6
J 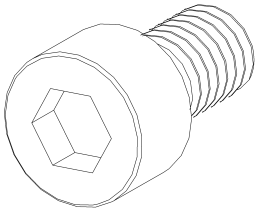 x4	K 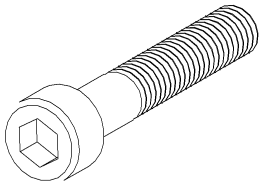 x4	L 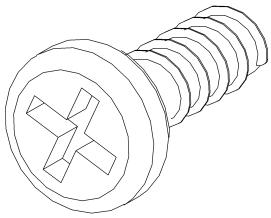 x14
M 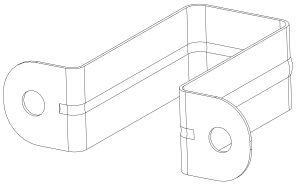 x1	N 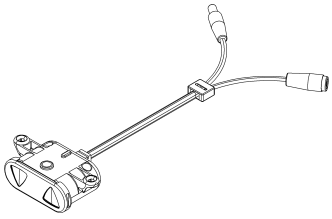 x1	O 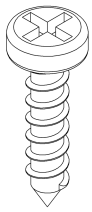 x2
P 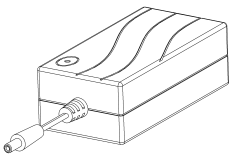 x1	Q 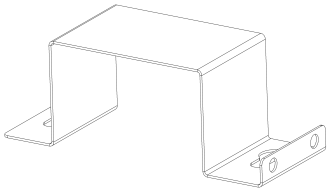 x1	R 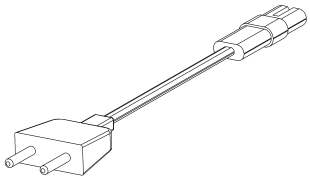 x1

7. Parts

S 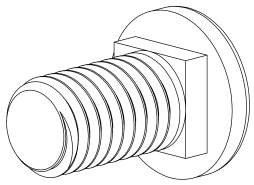 x16	T 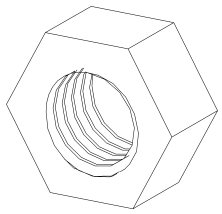 x18	U 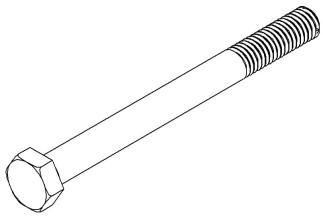 x2
V 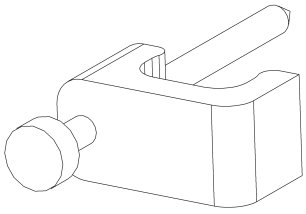 x2		

8. Assembly Instruction and User Manual

1

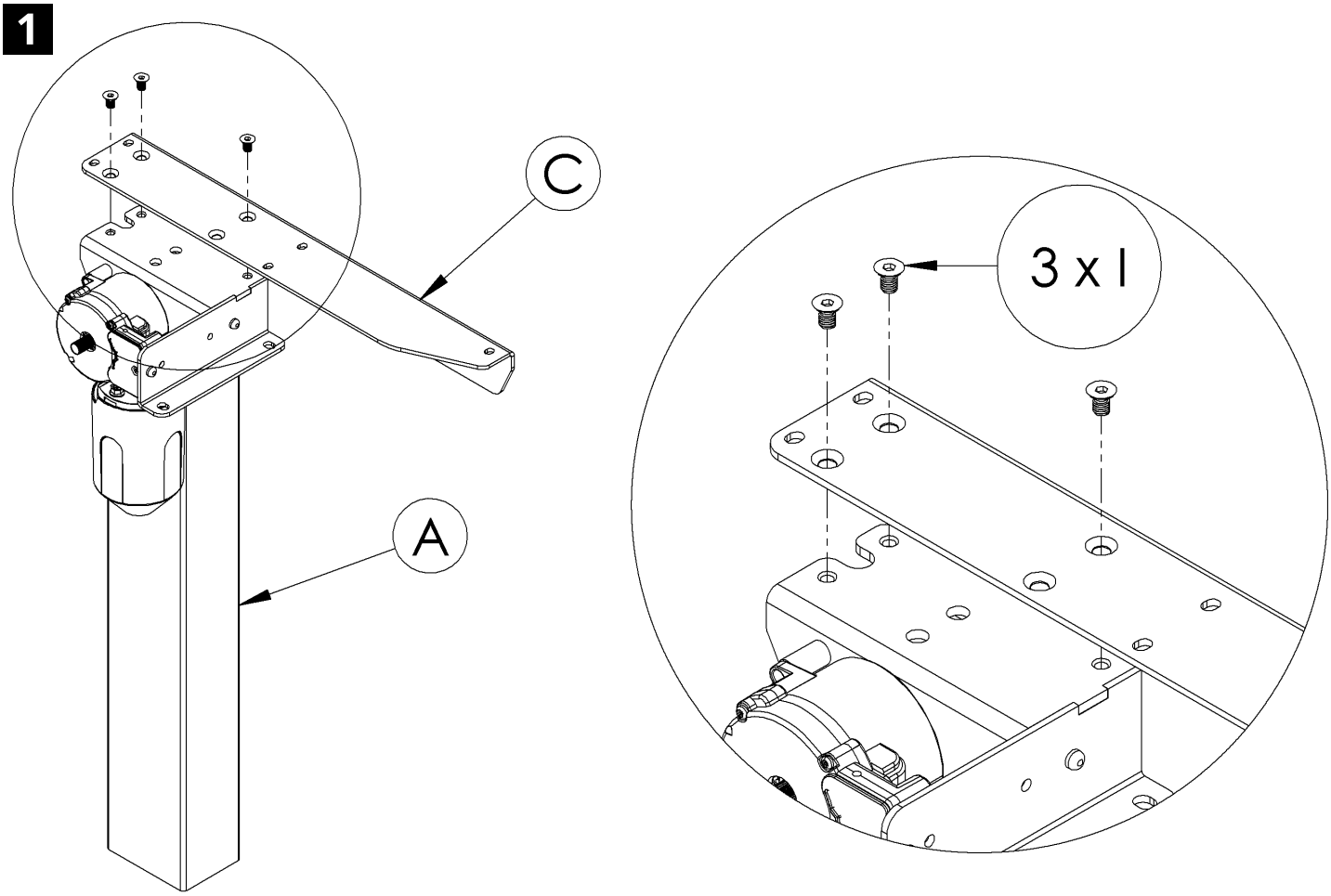

2

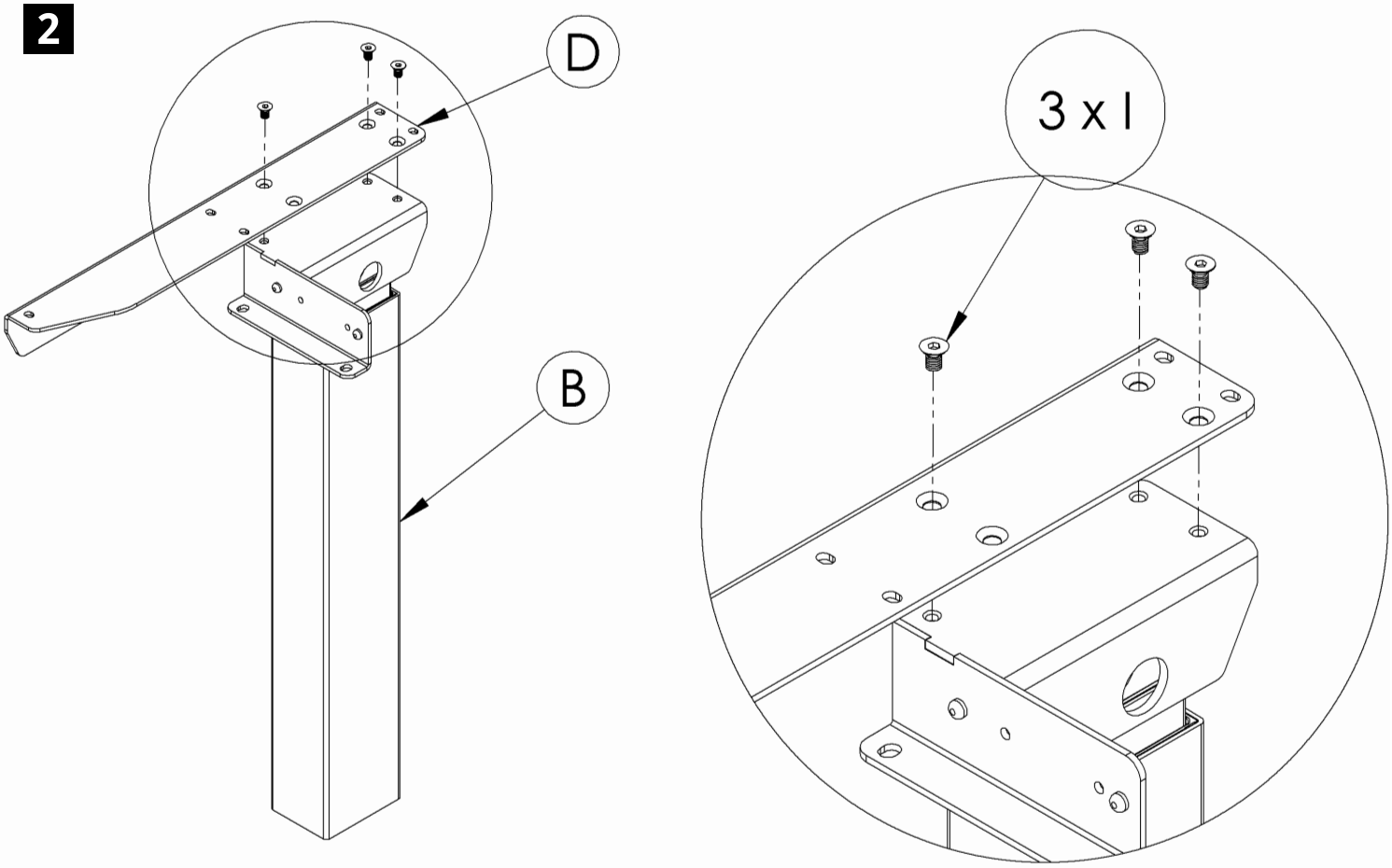

3

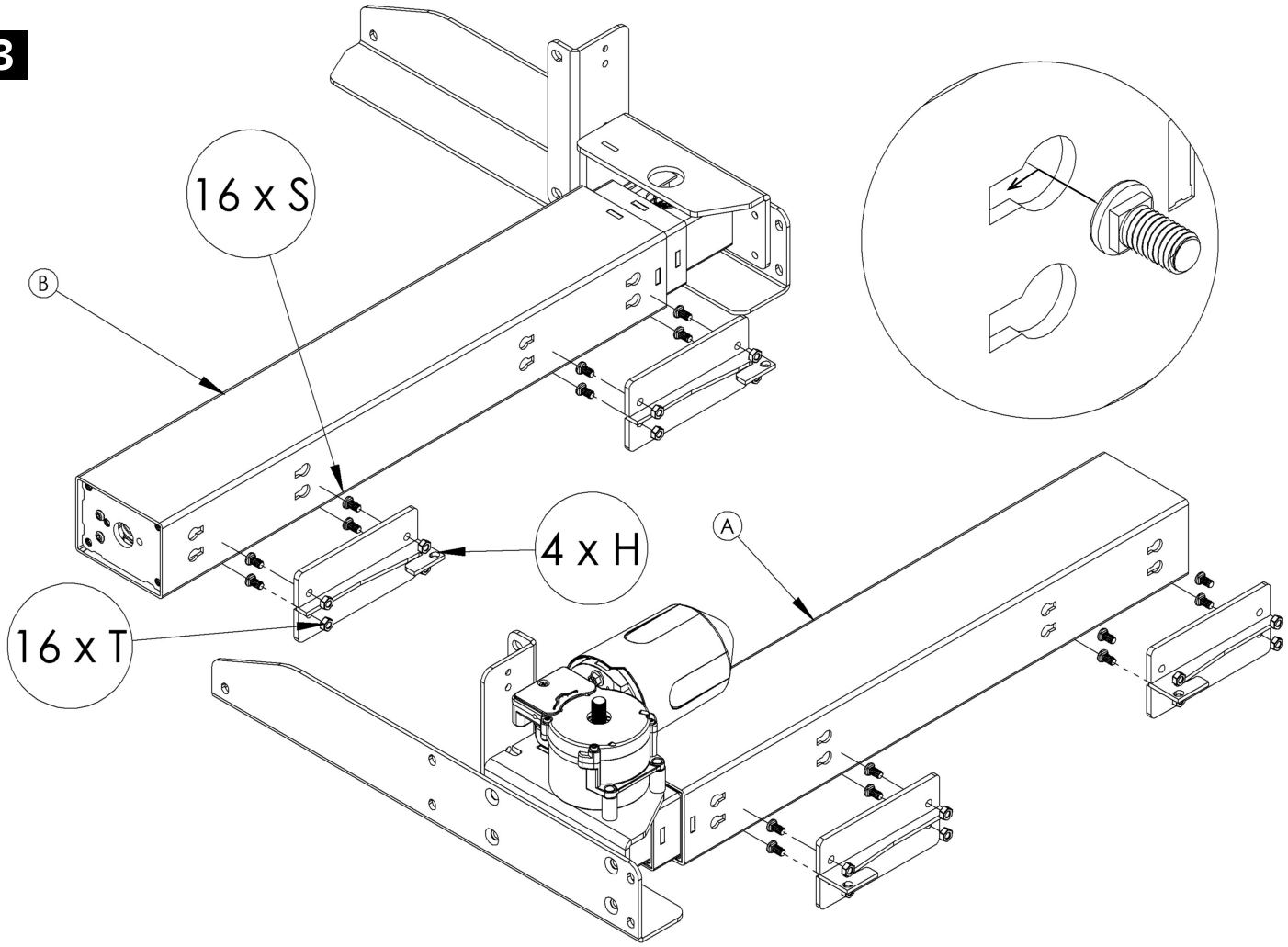

4

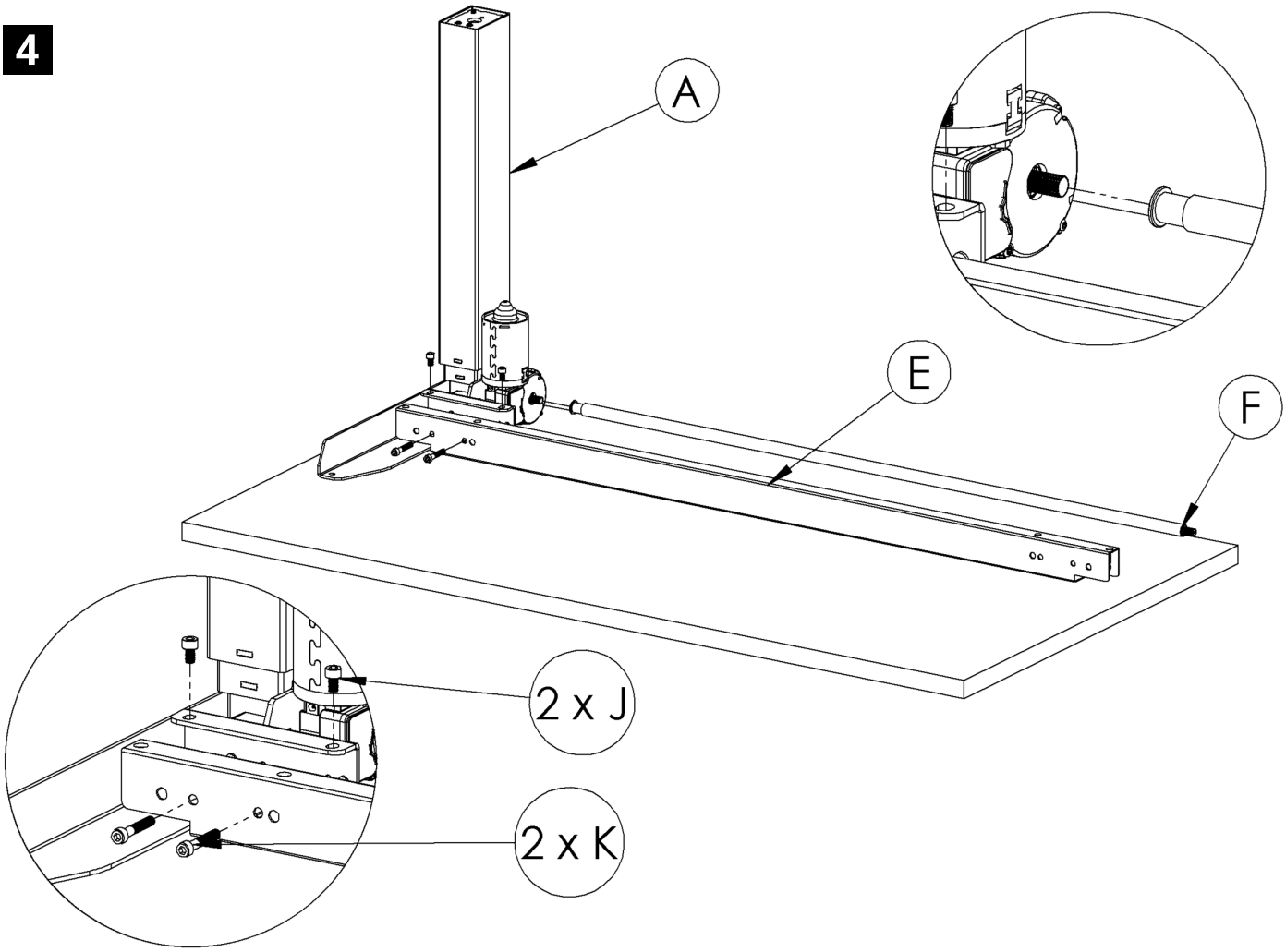

5

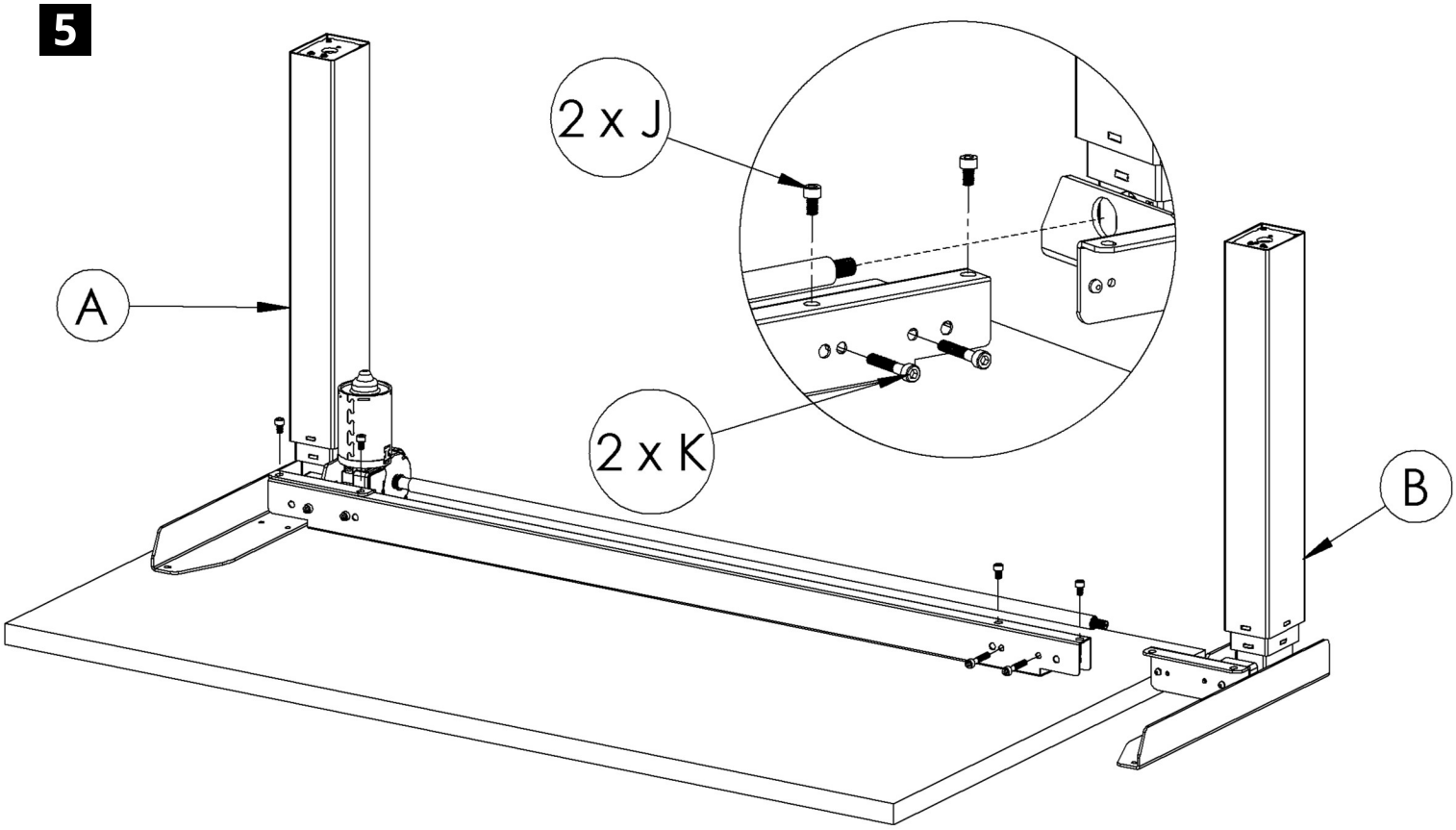

6

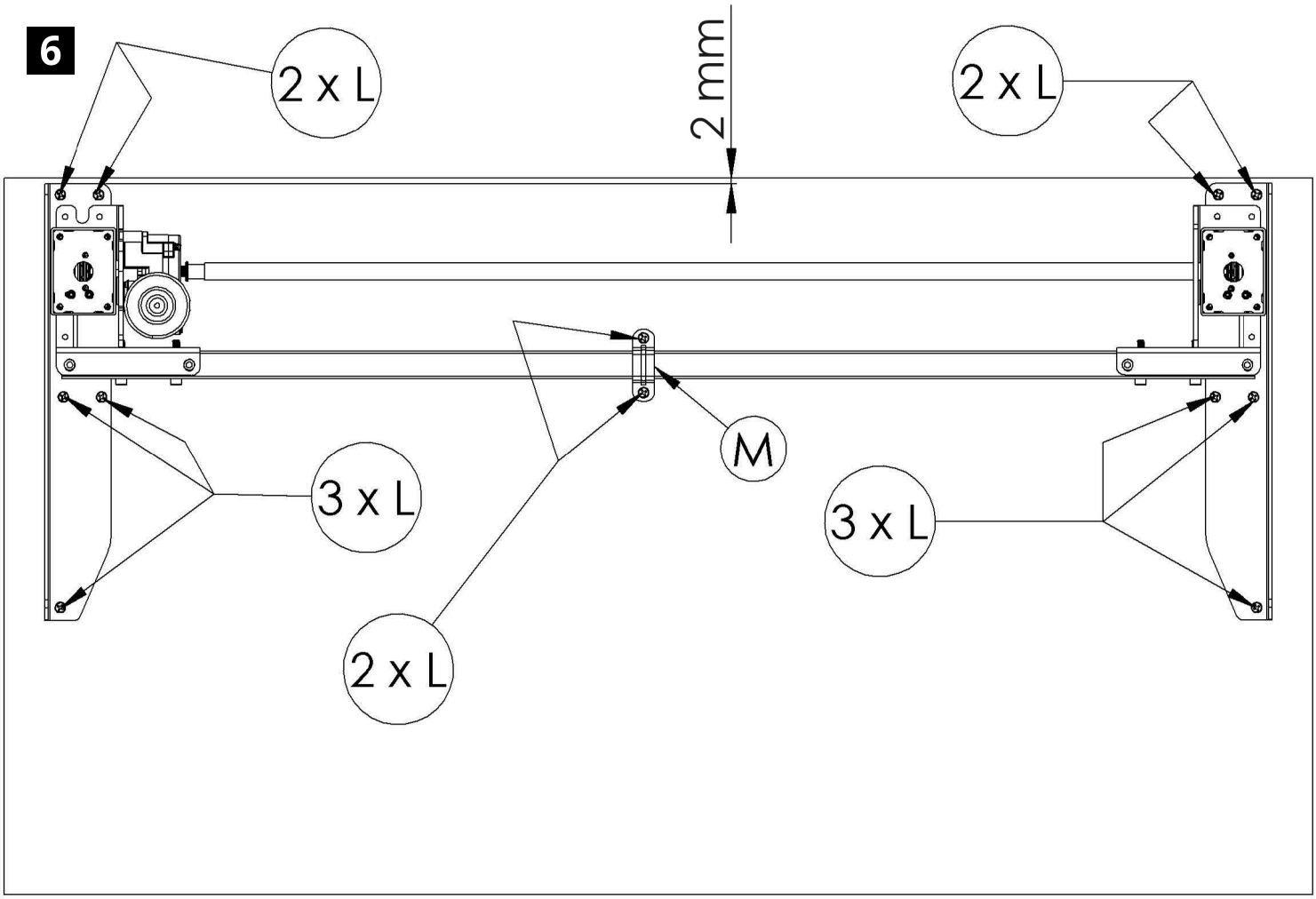

7

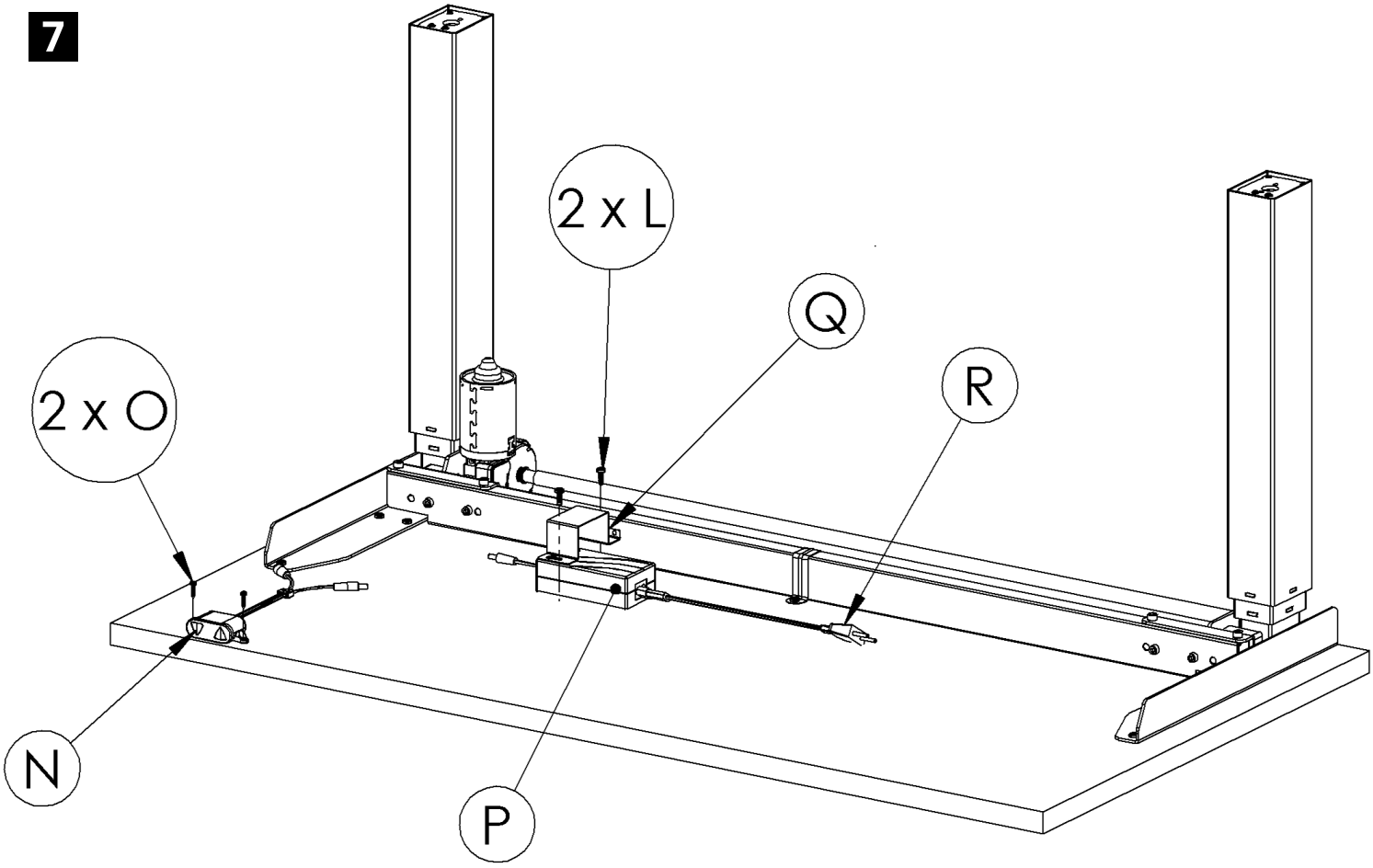

8

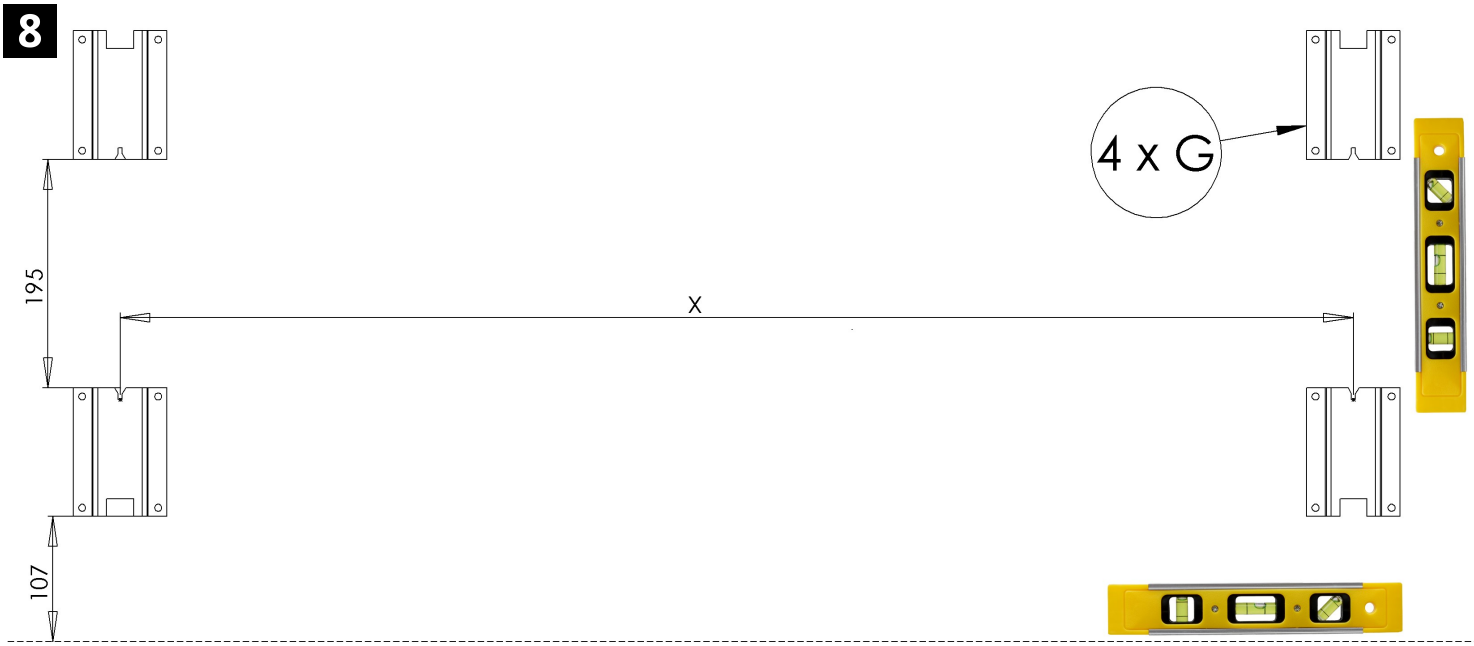

TRAVERS	X (mm)
SQ143950, travers 72cm	654
SQ141480, travers 92cm	854
SQ137690, travers 112cm	1054
SQ139480, travers 129cm	1224
SQ134460, travers 152cm	1454
SQ138890, travers 172cm	1654

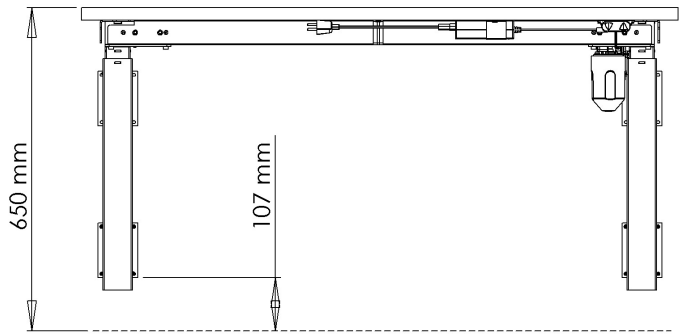

9

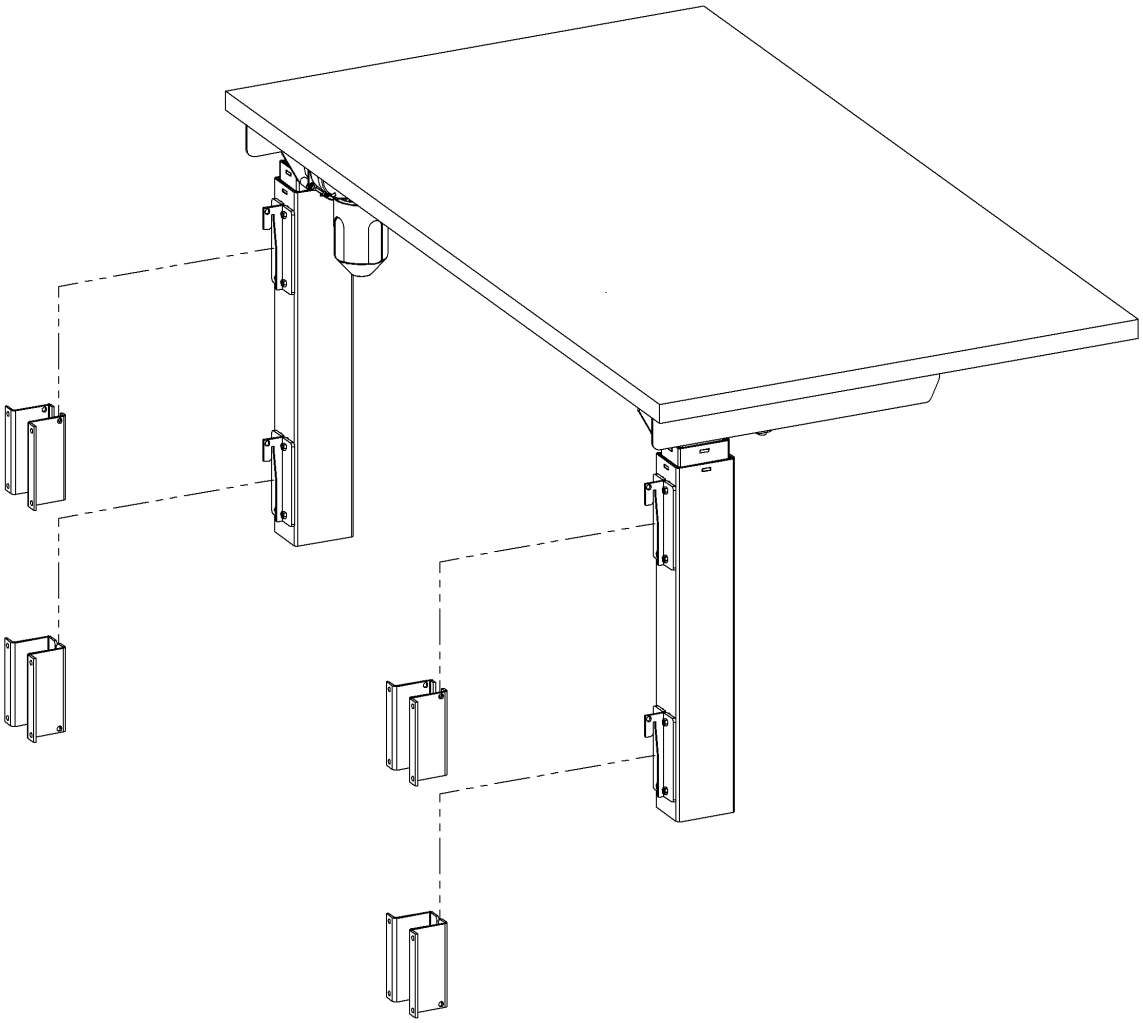
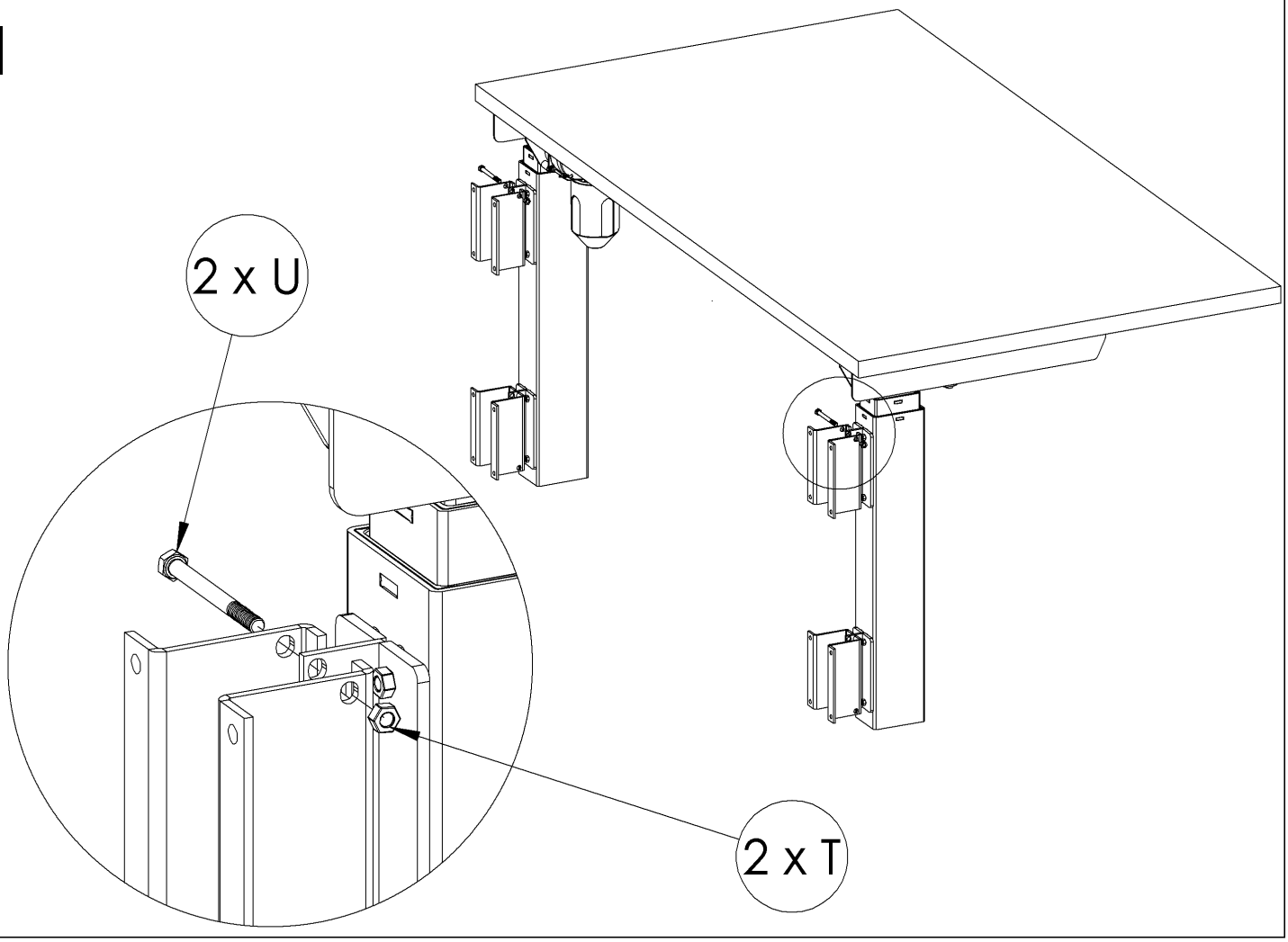
10